Pietro Fiorentini

GOVERNORS

PFG300 & PFG400 series

Line Pressure Regulators

*** APPLICATION NOTES ***

1. The Governor regulator is ANSI Z21.80A-2012 / CSA 6.22A-2012(R2016) and ANSI Z21.18B-2012 / CSA 6.3B-2012 (R2017) certified for vent limited installations (indoor installations where a vent line is not required) depending upon local codes and standards requirements. Per the terminology of the standard there is no"vent less regulator", they are vent limited because they can leak up to 2.5 cu.ft. per hr. (1 cu.ft. per hr. propane) per the code. The regulators per code can be installed without installing a vent line but again are technically termed "vent limited" per the standard and not "vent less".
2. The tables listed are guidelines in capacity. The actual capacity can differ based on inlet and outlet piping, type of equipment installed and flowing differential pressure of the system.
3. The Governor is a bubble tight full lockup regulator (it will not leak gas downstream when it shuts off). Lock up of the Governor is certified to ANSI Z21.80A-2012 / CSA 6.22A-2012(R2016) and ANSI Z21.18B-2012 / CSA 6.3B-2012 (R2017) standard. Lock up in any given installation can vary based on, piping, snap acting gas valves on high efficiency equipment , firing rate at the time of equipment shut off,debris in the line, temperature, as well as many other variables. You may see variations in lock up in some installations due to the above Pietro Fiorentini will not guarantee the lock up will meet your equipment requirement due to these variations in installations and piping.
4. The Standard Capacity (SC) GOVERNORS 3/8" - 1" are intended for use on equipment such as unit heaters or simple on/off furnace applications
5. GOVERNORS ½ - 1" on "High Efficiency" quick acting gas valve applications, such as generators, pool heaters, or high turn down boilers it is recommended to use High Capacity (HC) version. Install a regulator on each individual piece of equipment. Size the regulator at minimum 50% to 100% of listed capacity to minimize high lock-up. Make sure you match the regulator pipe size to the pipe size of the equipment gas train and design the piping to minimize pressure drop to 1" W.C. between the regulator and the gas train.
6. Try to match the GOVERNOR regulator to the pipe size of the equipment and minimize pressure drop between the regulator and equipment to 1" W.C.. Minimize the amount of elbows and fittings between the regulator and the equipment and use full port ball valves not plug valves or reduced port valves.
7. Be careful on applications where you increase the outlet piping more than 1 diameter. You may need to install an external control line in the larger piping. The GOVERNOR can be ordered with or retrofitted with an external control line.
8. Do not install the regulator directly at the equipment. Install the regulator 3 to 10 feet away depending on the application.
9. Never install the external brass vent limiter outdoors. For outdoors installation install appropriate vent protection.
10. All GOVERNORS include an inlet filter. The filter and/or regulator may be cleaned by removing the bottom plate Torx security screws, bottom plate assembly, then remove the filter. The filter can then be cleaned with detergent or Buna compatible solvent and dried. The valve and orifice can be cleaned with a cloth while the bottom plate is off. Then reassemble the unit.
11. If there are ever any questions on the installation or application of the Governor regulator, immediately contact your local authorized distributor or representative.
12. The maximum inlet pressure on the regulator label is the required maximum pressure of the ANSI Z21.80A-2012 / CSA 6.22A-2012(R2016) and ANSI Z21.18B-2012 / CSA 6.3B-2012 (R2017) rating. It is not always the maximum allowable operating inlet pressure of the regulator. The rating is a CSA requirement.

*** WARRANTY POLICY ***

1. The Seller undertakes to remedy any defects, lack of quality or non conformity of the goods contract for which he is responsible, provided such defects have been notified in accordance within 10 (ten) days from the occurrence. The Seller may either repair or replace the goods which have shown to be defective. In case of repair, request to return product(s) for repair must be pre-approved in writing by our Sales Department. The product(s) shall be returned pre-paid to Pietro Fiorentini USA.

2. Seller is not responsible for defects due to: natural wearing, Buyer's inexperience, negligence, tampering or wrong assemblage, overcome of limits conditions, non authorized intervention, force majeure or fault of the Buyer.

3. The duration of the guarantee is twenty four months from delivery of goods. The present warranty is not enforceable in case of lack of payment in the agreed terms. It is agreed that the obligation to repair or replace the defective goods is in lieu of any other legal guarantee or liability of the Seller, whether contractual or non contractual, which may arise out of or in relation with the goods supplied (e.g. compensation of damages, loss of profit, recall campaigns, etc.). For goods that have been purchased from sub-suppliers, the warranty guarantee granted by them is herewith extended to the Buyer.

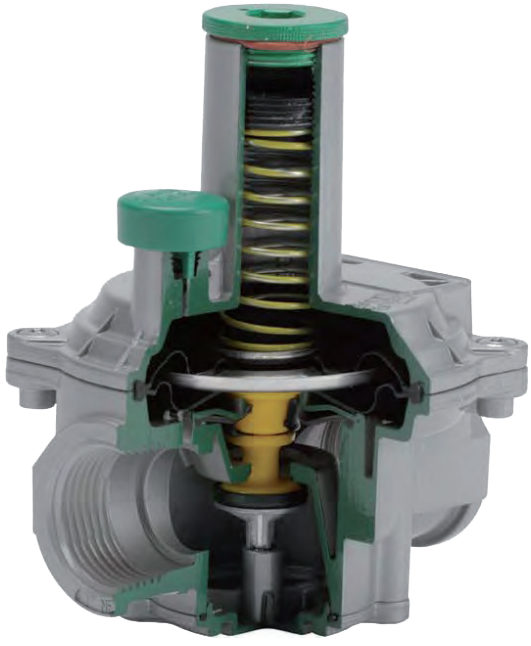

INTRODUCTION

Pietro Fiorentini's GOVERNOR line of gas regulators are designed to comply with the latest CSA and international standards for regulators suitable for indoor and outdoor installations with no modifications.

The GOVERNOR family of regulators are ideal for a wide range of residential through large industrial applications. The materials and soft parts used in the construction of the GOVERNOR regulators make them suitable for use with natural gas, LPG, Propane air and other non-corrosive gases.

All GOVERNOR regulators are equipped with balanced valve design for improved high outlet pressure accuracy regardless of Inlet pressure variation. The double diaphragm with integral vent limiter provides added security. The external vent limiter reduces piping costs and the need for costly vent piping for indoor installations and complies with CSA guidelines.* The number of high capacities and regulator options sometimes eliminates the need for separate units and significantly reduces installation costs.

Safe, Reliable and High Performance

- Integrated vent limiter: non removable, for indoor and outdoor installations.
- External vent limiter option for indoor installations*.
- Double diaphragm for added safety and greater reliability of service.
- Balanced valve design provides increased capacity, up to 500:1 turndown and stable regulation from low to high flow.
- Complete lockup in absence of gas flow, 100% bubble tight shutoff.
- Filter included in all versions.

*As Approved by Local Codes and Standards
** Brass Vent Limiters must be removed for outdoor installation **

MATERIALS

Body & Cover: Aluminum Alloy
External Coatings: Polyurethane paint on request
Diaphragm, O Rings & Valve: Nitrile Rubber
Diaphragm Pan: Aluminized Steel

C US

STANDARD MODEL
Inlet Pressure Range:
3" W.C. to 10PSIG

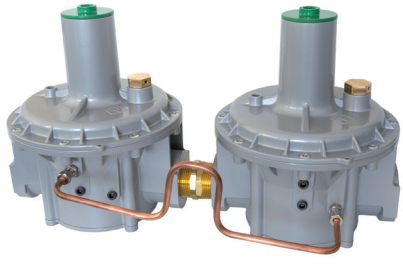

OVER PRESSURE DEVICE (OPD) MODEL
Inlet Pressure Range:
7" W.C. to 10PSIG

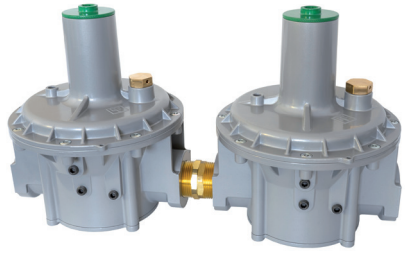

DUAL CUT (DC) MODEL
Inlet Pressure Range:
3 PSIG to 10 PSIG

PFG400

Pietro Fiorentini's **PFG400** line of gas regulators are designed to comply with the latest **CSA** and international standards for regulators suitable for indoor and outdoor installations with no modifications.

The **PFG400** family of regulators are ideal for a wide range of residential through large industrial applications.The materials and soft parts used in the construction of the **PFG400** regulators make them suitable for use with **natural gas, LPG, Propane air and other non-corrosive** gases.

All **PFG400** can achieve high outlet pressure accuracy regardless of Inlet pressure variation. The external vent limiter reduces piping costs and the need for costly vent piping for indoor installations and complies with CSA guidelines.*

Safe, Reliable and High Performance

- External vent limiter option for indoor installations*.
- Both vertical and horizontal installation positions
- Complete lockup in absence of gas flow, 100% bubble tight shutoff.
- Designed to be used on furnaces and simple on-off loads.
- For high-efficiency equipment use high capacity governors.

*As Approved by Local Codes and Standards
** Brass Vent Limiters must be removed for outdoor installation **

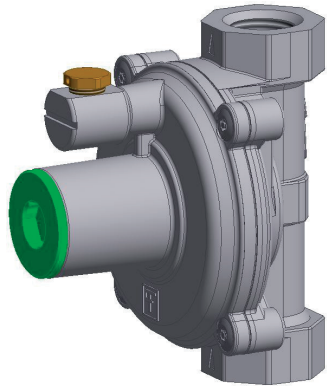

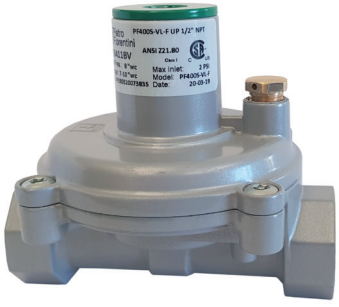

STANDARD MODEL
Inlet Pressure Range:
14" W.C. to 2 PSIG

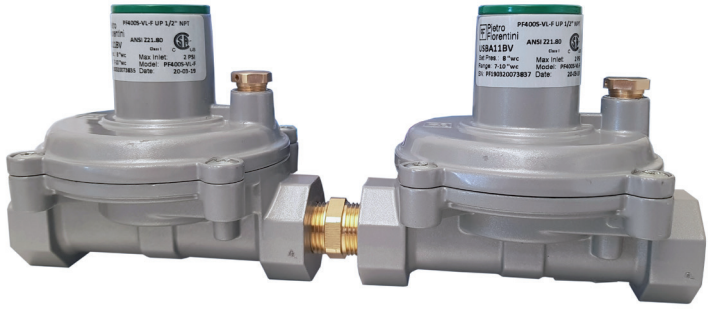

DUAL CUT (DC) MODEL
Inlet Pressure Range: 2 PSIG to 10 PSIG

C US

PFG400 STANDARD MODEL

2 PSIG

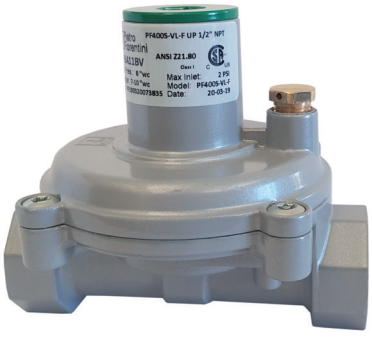

C US

MAIN FEATURES

ANSI Z21.80A / CSA 6.22 Class I for outlet pressures up to 14” W.C. Certified
ANSI Z21.18B-2012 / CSA 6.3B-2012 (R2017) for inlet pressure up to 5 PSI certified
External Vent Limiter – no vent line required**
Positive 100% bubble tight lockup
Filter included in all models

SPECIFICATIONS

Suitable for use with Natural Gas, LPG, and other non-corrosive, clean gas
Inlet Pressure: 14” W.C. to 2 PSIG CSA approved
Max. Inlet 10 PSIG for non-CSA applications
Outlet pressure: 2” W.C. to 14” W.C.
Temperature range: -40°F to 150°F
Connections: 3/8” and 1/2”
Maximum Emergency Inlet Exposure Pressure: 65 PSIG
Suitable for Indoor or Outdoor Installation***

OPTIONS

(VL) Ventlimiter
(F) Filter

VENT SIZE

1/8” NPT

OUTLET SPRING RANGE

Red 2.5” W .C. to 7” W.C.*
Black 7” W.C. to 10” W.C.*
Yellow 10” W.C. to 14” W.C.*
Violet 1.65” PSIG to 2 PSIG

* Spring is CSA outlet pressure certified
** As Approved by Local Codes and Standards
*** Brass vent limiter must be removed for outdoor installation

CAPACITY FOR MULTI-APPLIANCE SERVICE (SCFH)

Outlet Pressure Set Point		Operating Inlet Pressure					
		1/2 PSI	3/4 PSI	1 PSI	1 1/2 PSI	2 PSI	5 PSI
PF400S 1/2”	2.5” W.C.	160	225	300	350	400	400
	7” W.C.	145	200	275	350	400	400
	10” W.C.	110	200	275	350	400	400
	14” W.C.	/	175	250	325	400	400
PF400S 3/8”	2.5” W.C.	160	180	200	225	250	250
	7” W.C.	145	180	200	225	250	250
	10” W.C.	110	180	250	275	300	300
	14” W.C.	/	160	200	250	300	300

Tab.1

Single appliance max capacity 140 SCF/H

The flow rate with or without filter is the same.

Pietro Fiorentini

PFG400 DUAL CUT (DC) MODEL

10 PSIG

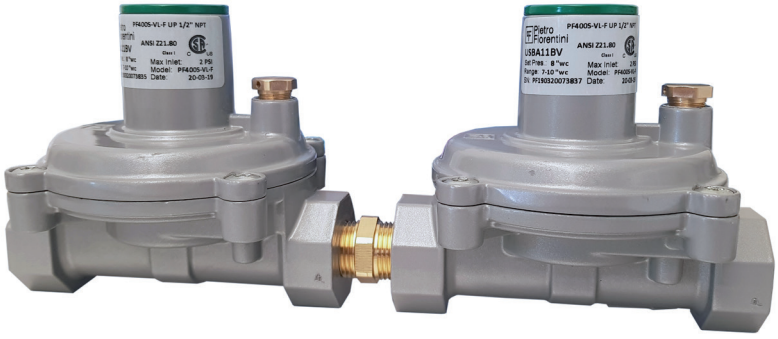

MAIN FEATURES

- 2 stage out for added safety
- ANSI Z21.80A / CSA 6.22A Class II for outlet pressures up to 14” W.C. and inlet pressure up to 10 PSIG Certified.
- External Vent Limiter – no vent line required**
- Positive 100% bubble tight lockup
- Filter included in all models

SPECIFICATIONS

- Suitable for use with Natural Gas, LPG, and other non-corrosive, clean gas
- Inlet Pressure: 2 PSIG to 10 PSIG CSA approved
- Outlet pressure: 2” W.C. to 14” W.C.
- Temperature range: -40°F to 150°F
- Connections: 3/8” and 1/2”
- Maximum Emergency Inlet Exposure Pressure: 65 PSIG
- Suitable for Indoor or Outdoor Installation***

OPTIONS

- (VL) Ventlimiter
- (F) Filter

VENT SIZE

1/8” NPT

OUTLET SPRING RANGE

- Red 2.5” W .C. to 7” W.C.*
- Black 7” W.C. to 10” W.C.*
- Yellow 10” W.C. to 14” W.C.*
- Violet 1.65” PSIG. to 2 PSIG

* Spring is CSA outlet pressure certified

** As Approved by Local Codes and Standards

*** Brass vent limiter must be removed for outdoor installation

CAPACITY FOR MULTI-APPLIANCE SERVICE (SCFH)

Outlet Pressure Set Point		Operating Inlet Pressure		
		3 PSI	5 PSI	10 PSI
PF400S 1/2”	2.5” W.C.	350	400	400
	7” W.C.	350	400	400
	10” W.C.	350	400	400
	14” W.C.	350	400	400
PF400S 3/8”	2.5” W.C.	200	250	250
	7” W.C.	250	250	250
	10” W.C.	300	300	300
	14” W.C.	300	300	300

Tab.2

The flow rate with or without filter is the same.

Single appliance max capacity 140 SCF/H

PFG300

2 PSIG

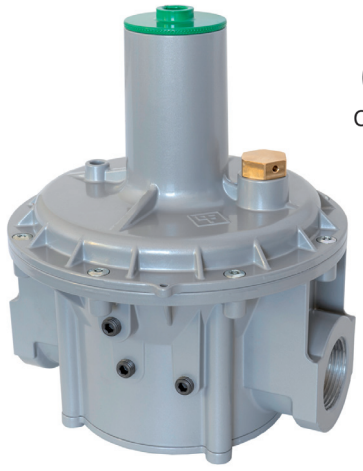

STANDARD MODEL

Inlet Pressure Range: 3” W.C. to 2 PSIG

MAIN FEATURES

ANSI Z21.80A / CSA 6.22A Class I for outlet pressures up to 14” W.C. Certified
Integral Vent Limiter
External Vent Limiter – no vent line required**
Positive 100% bubble tight lockup
Inlet and Outlet test ports 500 to 1 Turndown
Filter included in all models

SPECIFICATIONS

Suitable for use with Natural Gas,
LPG, and other non-corrosive, clean gas
Inlet Pressure: 3” W.C. to 2 PSIG CSA approved
Max. Inlet 7.25 PSIG for non-CSA applications
Outlet pressure: 2” W.C. to 14” W.C. CSA approved up to 4.25 PSIG for non-CSA applications
Temperature range: -40°F to 150°F
Connections: ½” thru 4”
Maximum Emergency Inlet Exposure Pressure: 80 PSIG
Suitable for Indoor or Outdoor Installation***

VENT SIZE

1/4” NPT 1/2” – 1”
1/2” NPT 1-1/4” – 4”

OUTLET SPRING RANGE

Green 2” W .C. to 5.1” W.C.*
Red 2.75” W .C. to 7.87” W.C.*
White 4” W .C. to 11.8” W.C.*
Black 6” W.C. to 14” W.C.*
Yellow 9.8” W.C. to 27.5” W.C.*
Violet 23.6” W.C. to 59” W.C. or 0.85 to 2.13 PSIG * Orange 55” W.C. to 118” W.C. or 2 to 4.26 PSIG

* Spring is CSA outlet pressure certified
** As Approved by Local Codes and Standards
*** Brass vent limiter must be removed for outdoor installation

TECHNICAL DATA

Capacity in cfh for .60 Specific gravity gas with filter (capacity without filter in brackets)

Description and Model Number	Outlet Pressure Set Point	Operating Inlet Pressure		
		14" W.C.	1 PSIG	2 PSIG
PFG300-SC 1/2" STD	8" W.C.	308 (363)	553 (651)	785 (924)
31051 1/2"	11" W.C.	220 (259)	512 (602)	788 (927)
PFG300-SC 3/4" STD	8" W.C.	372 (453)	667 (814)	947 (1,155)
31052 3/4"	11" W.C.	265 (324)	617 (753)	950 (1,159)
PFG300-SC 1" STD	8" W.C.	499 (589)	895 (1,058)	1,270 (1,501)
31053 1"	11" W.C.	356 (421)	828 (979)	1,275 (1,507)
PFG300-HC 1/2" STD	8" W.C.	612 (861)	1,098 (1,546)	1,559 (2,194)
31150 1/2"	11" W.C.	437 (615)	1,016 (1,430)	1,564 (2,202)
PFG300-HC 3/4" STD	8" W.C.	716 (1,088)	1,286 (1,953)	1,824 (2,771)
31151 3/4"	11" W.C.	512 (777)	1,189 (1,807)	1,831 (2,781)
PFG300-HC 1" STD	8" W.C.	906 (1,292)	1,627 (2,319)	2,309 (3,290)
31152 1"	11" W.C.	647 (923)	1,505 (2,145)	2,318 (3,303)
PFG300-HC 1-1/4" STD	8" W.C.	2,085 (3,082)	3,743 (5,533)	5,311 (7,851)
31153 1-1/4"	11" W.C.	1,489 (2,201)	3,463 (5,119)	5,331 (7,880)
PFG300-HC 1-1/2" STD	8" W.C.	2,583 (3,218)	4,638 (5,777)	6,581 (8,197)
31154 1-1/2"	11" W.C.	1,845 (2,299)	4,291 (5,344)	6,606 (8,228)
PFG300-HC 2" STD	8" W.C.	5,212 (5,892)	9,357 (10,578)	13,277 (15,009)
31155 2"	11" W.C.	3,723 (4,209)	8,656 (9,786)	13,327 (15,065)
PFG300-HC 2-1/2" STD	8" W.C.	6,572 (7,478)	11,798 (13,425)	16,741 (19,050)
31156/F 2-1/2"	11" W.C.	4,694 (5,342)	10,915 (12,420)	16,803 (19,121)
PFG300-HC 3" STD	8" W.C.	7,252 (9,065)	13,019 (16,273)	18,473 (23,091)
31157/F 3"	11" W.C.	5,180 (6,475)	12,044 (15,055)	18,542 (23,177)
PFG300-HC 4" STD	8" W.C.	12,917 (15,863)	23,189 (28,478)	32,905 (40,410)
31158/F 4"	11" W.C.	9,227 (11,331)	21,453 (26,346)	33,028 (40,560)

-SC stands for the Standard Capacity version and -HC for the High Capacity version

Tab.3

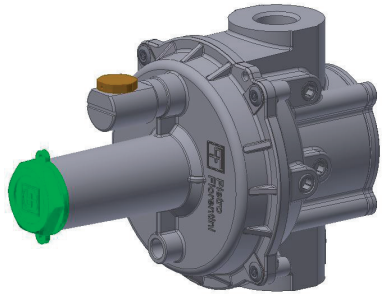

High-efficiency application

Capacity in cfh for .60 Specific gravity gas with filter (capacity without filter inbrackets)

Description and Model Number	Outlet Pressure	Operating Inlet Pressure		
	Set Point	14" W.C.	1 PSIG	2 PSIG
PFG300-SC 1/2" STD	8" W.C.	262 (308)	470 (553)	667 (785)
31051 1/2"	11" W.C.	187 (220)	435 (512)	670 (788)
PFG300-SC 3/4" STD	8" W.C.	316 (385)	567 (692)	805 (981)
31052 3/4"	11" W.C.	226 (275)	525 (640)	808 (985)
PFG300-SC 1" STD	8" W.C.	424 (501)	761 (899)	1,080 (1,276)
31053 1"	11" W.C.	303 (358)	704 (832)	1,084 (1,281)
PFG300-HC 1/2" STD	8" W.C.	428 (603)	769 (1,082)	1,091 (1,536)
31150 1/2"	11" W.C.	306 (431)	711 (1,001)	1,095 (1,541)
PFG300-HC 3/4" STD	8" W.C.	501 (761)	900 (1,367)	1,277 (1,940)
31151 3/4"	11" W.C.	358 (544)	833 (1,265)	1,282 (1,947)
PFG300-HC 1" STD	8" W.C.	635 (904)	1,139 (1,623)	1,616 (2,303)
31152 1"	11" W.C.	453 (646)	1,054 (1,502)	1,622 (2,312)
PFG300-HC 1-1/4" STD	8" W.C.	1,459 (2,157)	2,620 (3,873)	3,718 (5,496)
31153 1-1/4"	11" W.C.	1,042 (1,541)	2,424 (3,583)	3,732 (5,516)
PFG300-HC 1-1/2" STD	8" W.C.	1,808 (2,253)	3,246 (4,044)	4,607 (5,738)
31154 1-1/2"	11" W.C.	1,292 (1,609)	3,003 (3,741)	4,624 (5,760)
PFG300-HC 2" STD	8" W.C.	3,649 (4,124)	6,550 (7,404)	9,294 (10,506)
31155 2"	11" W.C.	2,606 (2,946)	6,060 (6,850)	9,329 (10,546)
PFG300-HC 2-1/2" STD	8" W.C.	4,600 (5,235)	8,259 (9,398)	11,719 (13,335)
31156/F 2-1/2"	11" W.C.	3,286 (3,739)	7,640 (8,694)	11,762 (13,385)
PFG300-HC 3" STD	8" W.C.	5,076 (6,345)	9,113 (11,391)	12,931 (16,164)
31157/F 3"	11" W.C.	3,626 (4,532)	8,431 (10,538)	12,979 (16,224)
PFG300-HC 4" STD	8" W.C.	9,042 (11,104)	16,232 (19,935)	23,033 (28,287)
31158/F 4"	11" W.C.	6,459 (7,932)	15,017 (18,442)	23,119 (28,392)

-SC stands for the Standard Capacity version and -HC for the High Capacity version

Tab.4

Pietro Fiorentini

PFG300 GOVERNOR OVER PRESSURE DEVICE (OPD) MODEL

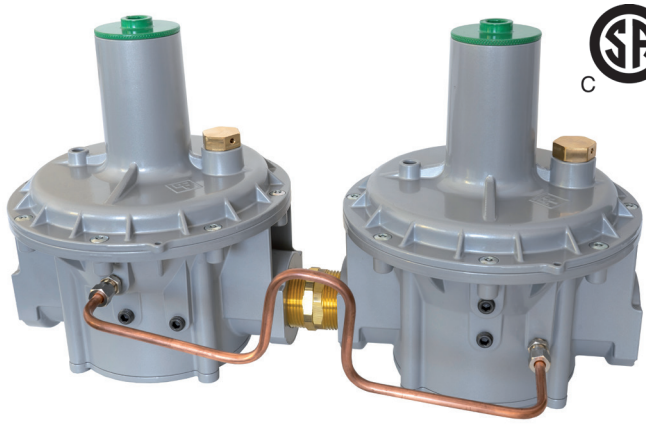

C US

10 PSIG

OVER PRESSURE DEVICE (OPD) MODEL
Inlet Pressure Range: 7” W.C. to 10 PSIG

MAIN FEATURES

Worker & Monitor for added Safety
ANSI Z21.80 / CSA 6.22 Class I and Class II for outlet pressures up to 14” W.C. and inlet pressures up to 10 PSIG Certified
Integral Vent Limiter
External Vent Limiter – no vent line required**
Positive 100% bubble tight lockup Inlet and Outlet test ports 500 to 1 Turndown
Filter included in all models

SPECIFICATIONS

Suitable for use with Natural Gas, LPG, and other non-corrosive, clean gas
Inlet Pressure: 7” W.C. to 10 PSIG CSA approved
Max. Inlet 10 PSIG for non-CSA applications
Outlet pressure: 2” W.C. to 1” PSIG CSA approved and up to 4.25 PSIG for non-CSA applications
Temperature range: -40°F to 150°F
Connections: ½” thru 4”
Maximum Emergency Inlet Exposure Pressure: 80 PSIG
Suitable for Indoor or Outdoor Installation***

VENT SIZE

1/4” NPT 1/2” – 1”
1/2” NPT 1-1/4” – 4”

OUTLET SPRING RANGE

Green	2” W .C. to 5.1” W.C.*
Red	2.75” W .C. to 7.87” W.C.*
White	4” W .C. to 11.8” W.C.*
Black	6” W.C. to 14” W.C.*
Yellow	9.8” W.C. to 27.5” W.C.*
Violet	23.6” W.C. to 59” W.C. or 0.85 to 2.13 PSIG *
Orange	55” W.C. to 118” W.C. or 2 to 4.26 PSIG

* Spring is CSA outlet pressure certified
** As Approved by Local Codes and Standards
*** Brass vent limiter must be removed for outdoor installation

TECHNICAL DATA

Capacity in cfh for .60 Specific gravity gas with filter (capacity without filter in brackets)

Description and Model Number	Outlet Pressure Set Point	Operating Inlet Pressure 3 PSIG	5 PSIG	10 PSIG
PFG300-SC 1/2" OPD 31051-OPD 1/2"	8" W.C.	785 (924)	785 (924)	785 (924)
	11" W.C.	788 (927)	788 (927)	788 (927)
	14" W.C.	791 (931)	791 (931)	791 (931)
PFG300-SC 3/4" OPD 31052-OPD 3/4"	8" W.C.	947 (1,155)	947 (1,155)	947 (1,155)
	11" W.C.	950 (1,159)	950 (1,159)	950 (1,159)
	14" W.C.	954 (1,163)	954 (1,163)	954 (1,163)
PFG300-SC 1" OPD 31053-OPD 1"	8" W.C.	1,270 (1,501)	1,270 (1,501)	1,270 (1,501)
	11" W.C.	1,275 (1,507)	1,275 (1,507)	1,275 (1,507)
	14" W.C.	1,279 (1,512)	1,279 (1,512)	1,279 (1,512)
PFG300-HC 1/2" OPD 31150-OPD 1/2"	8" W.C.	1,559 (2,194)	1,559 (2,194)	1,559 (2,194)
	11" W.C.	1,564 (2,202)	1,564 (2,202)	1,564 (2,202)
	14" W.C.	1,570 (2,210)	1,570 (2,210)	1,570 (2,210)
PFG300-HC 3/4" OPD 31151-OPD 3/4"	8" W.C.	1,824 (2,771)	1,824 (2,771)	1,824 (2,771)
	11" W.C.	1,831 (2,781)	1,831 (2,781)	1,831 (2,781)
	14" W.C.	1,838 (2,792)	1,838 (2,792)	1,838 (2,792)
PFG300-HC 1" OPD 31152-OPD 1"	8" W.C.	2,309 (3,290)	2,309 (3,290)	2,309 (3,290)
	11" W.C.	2,318 (3,303)	2,318 (3,303)	2,318 (3,303)
	14" W.C.	2,326 (3,315)	2,326 (3,315)	2,326 (3,315)
PFG300-HC 1-1/4" OPD 31153-OPD 1-1/4"	8" W.C.	5,311 (7,851)	5,311 (7,851)	5,311 (7,851)
	11" W.C.	5,331 (7,880)	5,331 (7,880)	5,331 (7,880)
	14" W.C.	5,350 (7,909)	5,350 (7,909)	5,350 (7,909)
PFG300-HC 1-1/2" OPD 31154-OPD 1-1/2"	8" W.C.	6,581 (8,197)	6,581 (8,197)	6,581 (8,197)
	11" W.C.	6,606 (8,228)	6,606 (8,228)	6,606 (8,228)
	14" W.C.	6,630 (8,258)	6,630 (8,258)	6,630 (8,258)
PFG300-HC 2" OPD 31155-OPD 2"	8" W.C.	13,277 (15,009)	13,277 (15,009)	13,277 (15,009)
	11" W.C.	13,327 (15,065)	13,327 (15,065)	13,327 (15,065)
	14" W.C.	13,376 (15,121)	13,376 (15,121)	13,376 (15,121)
PFG300-HC 2-1/2" OPD 31156/F-OPD 2-1/2"	8" W.C.	16,741 (19,050)	16,741 (19,050)	16,741 (19,050)
	11" W.C.	16,803 (19,121)	16,803 (19,121)	16,803 (19,121)
	14" W.C.	16,866 (19,192)	16,866 (19,192)	16,866 (19,192)
PFG300-HC 3" OPD 31157/F-OPD 3"	8" W.C.	18,473 (23,091)	18,473 (23,091)	18,473 (23,091)
	11" W.C.	18,542 (23,177)	18,542 (23,177)	18,542 (23,177)
	14" W.C.	18,610 (23,263)	18,610 (23,263)	18,610 (23,263)
PFG300-HC 4" OPD 31158/F-OPD 4"	8" W.C.	32,905 (40,410)	32,905 (40,410)	32,905 (40,410)
	11" W.C.	33,028 (40,560)	33,028 (40,560)	33,028 (40,560)
	14" W.C.	33,150 (40,710)	33,150 (40,710)	33,150 (40,710)

-SC stands for the Standard Capacity version and -HC for the High Capacity version

Tab.5

TECHNICAL DATA

High-efficiency application

Capacity in cfh for .60 Specific gravity gas with filter (capacity without filter in brackets)

Description and Model Number	Outlet Pressure	Operating Inlet Pressure		
	Set Point	3 PSIG	5 PSIG	10 PSIG
PFG300-SC 1/2" OPD 31051-OPD 1/2"	8" W.C.	667 (785)	667 (785)	667 (785)
	11" W.C.	670 (788)	670 (788)	670 (788)
	14" W.C.	672 (791)	672 (791)	672 (791)
PFG300-SC 3/4" OPD 31052-OPD 3/4"	8" W.C.	805 (981)	805 (981)	805 (981)
	11" W.C.	808 (985)	808 (985)	808 (985)
	14" W.C.	811 (989)	811 (989)	811 (989)
PFG300-SC 1" OPD 31053-OPD 1"	8" W.C.	1,080 (1,276)	1,080 (1,276)	1,080 (1,276)
	11" W.C.	1,084 (1,281)	1,084 (1,281)	1,084 (1,281)
	14" W.C.	1,088 (1,285)	1,088 (1,285)	1,088 (1,285)
PFG300-HC 1/2" OPD 31150-OPD 1/2"	8" W.C.	1,091 (1,536)	1,091 (1,536)	1,091 (1,536)
	11" W.C.	1,095 (1,541)	1,095 (1,541)	1,095 (1,541)
	14" W.C.	1,099 (1,547)	1,099 (1,547)	1,099 (1,547)
PFG300-HC 3/4" OPD 31151-OPD 3/4"	8" W.C.	1,277 (1,940)	1,277 (1,940)	1,277 (1,940)
	11" W.C.	1,282 (1,947)	1,282 (1,947)	1,282 (1,947)
	14" W.C.	1,286 (1,954)	1,286 (1,954)	1,286 (1,954)
PFG300-HC 1" OPD 31152-OPD 1"	8" W.C.	1,616 (2,303)	1,616 (2,303)	1,616 (2,303)
	11" W.C.	1,622 (2,312)	1,622 (2,312)	1,622 (2,312)
	14" W.C.	1,628 (2,320)	1,628 (2,320)	1,628 (2,320)
PFG300-HC 1-1/4" OPD 31153-OPD 1-1/4"	8" W.C.	3,718 (5,496)	3,718 (5,496)	3,718 (5,496)
	11" W.C.	3,732 (5,516)	3,732 (5,516)	3,732 (5,516)
	14" W.C.	3,745 (5,537)	3,745 (5,537)	3,745 (5,537)
PFG300-HC 1-1/2" OPD 31154-OPD 1-1/2"	8" W.C.	4,607 (5,738)	4,607 (5,738)	4,607 (5,738)
	11" W.C.	4,624 (5,760)	4,624 (5,760)	4,624 (5,760)
	14" W.C.	4,641 (5,781)	4,641 (5,781)	4,641 (5,781)
PFG300-HC 2" OPD 31155-OPD 2"	8" W.C.	9,294 (10,506)	9,294 (10,506)	9,294 (10,506)
	11" W.C.	9,329 (10,546)	9,329 (10,546)	9,329 (10,546)
	14" W.C.	9,363 (10,585)	9,363 (10,585)	9,363 (10,585)
PFG300-HC 2-1/2" OPD 31156/F-OPD 2-1/2"	8" W.C.	11,719 (13,335)	11,719 (13,335)	11,719 (13,335)
	11" W.C.	11,762 (13,385)	11,762 (13,385)	11,762 (13,385)
	14" W.C.	11,806 (13,434)	11,806 (13,434)	11,806 (13,434)
PFG300-HC 3" OPD 31157/F-OPD 3"	8" W.C.	12,931 (16,164)	12,931 (16,164)	12,931 (16,164)
	11" W.C.	12,979 (16,224)	12,979 (16,224)	12,979 (16,224)
	14" W.C.	13,027 (16,284)	13,027 (16,284)	13,027 (16,284)
PFG300-HC 4" OPD 31158/F-OPD 4"	8" W.C.	23,033 (28,287)	23,033 (28,287)	23,033 (28,287)
	11" W.C.	23,119 (28,392)	23,119 (28,392)	23,119 (28,392)
	14" W.C.	23,205 (28,497)	23,205 (28,497)	23,205 (28,497)

-SC stands for the Standard Capacity version and -HC for the High Capacity version

Tab.6

PFG300 GOVERNOR DUAL CUT (DC) MODEL

10 PSIG

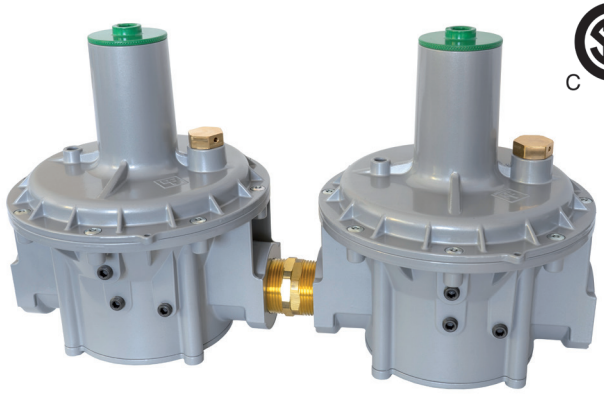

DUAL CUT (DC) MODEL
Inlet Pressure Range: 3 PSIG to 10 PSIG

MAIN FEATURES

2 stage out for added Safety
ANSI Z21.80 / CSA 6.22 Class I and Class II for outlet pressures up to 14" W.C. and inlet pressures up to 10 PSIG Certified
Two stage regulation for Over Pressure Protection
Integral Vent Limiter
External Vent Limiter – no vent line required**
Positive 100% bubble tight lockup Inlet and Outlet test ports 500 to 1 Turndown
Filter included in all models

SPECIFICATIONS

Suitable for use with Natural Gas,
LPG, and other non-corrosive, clean gas
Inlet Pressure: 3 PSIG to 10 PSIG CSA approved
Max. Inlet 10 PSIG for non-CSA applications
Outlet pressure: 2" W.C. to 1 PSIG CSA approved up to 4.25 PSIG for non-CSA applications
Temperature range: -40°F to 150°F
Connections: ½" thru 4"
Maximum Emergency Inlet Exposure Pressure: 80 PSIG
Suitable for Indoor or Outdoor Installation***

VENT SIZE

1/4" NPT 1/2" – 1"
1/2" NPT 1-1/4" – 4"

OUTLET SPRING RANGE

Green	2" W .C. to 5.1" W.C.*
Red	2.75" W .C. to 7.87" W.C.*
White	4" W .C. to 11.8" W.C.*
Black	6" W.C. to 14" W.C.*
Yellow	9.8" W.C. to 27.5" W.C.*
Violet	23.6" W.C. to 59" W.C. or 0.85 to 2.13 PSIG *
Orange	55" W.C. to 118" W.C. or 2 to 4.26 PSIG

* Spring is CSA outlet pressure certified
** As Approved by Local Codes and Standards
*** Brass vent limiter must be removed for outdoor installation

TECHNICAL DATA

Capacity in cfh for .60 Specific gravity gas with filter (capacity without filter in brackets)

Description and Model Number	Outlet Pressure Set Point	Operating Inlet Pressure 3 PSIG	5 PSIG	10 PSIG
PFG300-SC 1/2" DC 31051-DC 1/2"	8" W.C.	785 (924)	785 (924)	785 (924)
	11" W.C.	788 (927)	788 (927)	788 (927)
	14" W.C.	791 (931)	791 (931)	791 (931)
PFG300-SC 3/4" DC 31052-DC 3/4"	8" W.C.	947 (1,155)	947 (1,155)	947 (1,155)
	11" W.C.	950 (1,159)	950 (1,159)	950 (1,159)
	14" W.C.	954 (1,163)	954 (1,163)	954 (1,163)
PFG300-SC 1" DC 31053-DC 1"	8" W.C.	1,270 (1,501)	1,270 (1,501)	1,270 (1,501)
	11" W.C.	1,275 (1,507)	1,275 (1,507)	1,275 (1,507)
	14" W.C.	1,279 (1,512)	1,279 (1,512)	1,279 (1,512)
PFG300-HC 1/2" DC 31150-DC 1/2"	8" W.C.	1,559 (2,194)	1,559 (2,194)	1,559 (2,194)
	11" W.C.	1,564 (2,202)	1,564 (2,202)	1,564 (2,202)
	14" W.C.	1,570 (2,210)	1,570 (2,210)	1,570 (2,210)
PFG300-HC 3/4" DC 31151-DC 3/4"	8" W.C.	1,824 (2,771)	1,824 (2,771)	1,824 (2,771)
	11" W.C.	1,831 (2,781)	1,831 (2,781)	1,831 (2,781)
	14" W.C.	1,838 (2,792)	1,838 (2,792)	1,838 (2,792)
PFG300-HC 1" DC 31152-DC 1"	8" W.C.	2,309 (3,290)	2,309 (3,290)	2,309 (3,290)
	11" W.C.	2,318 (3,303)	2,318 (3,303)	2,318 (3,303)
	14" W.C.	2,326 (3,315)	2,326 (3,315)	2,326 (3,315)
PFG300-HC 1-1/4" DC 31153-DC 1-1/4"	8" W.C.	5,311 (7,851)	5,311 (7,851)	5,311 (7,851)
	11" W.C.	5,331 (7,880)	5,331 (7,880)	5,331 (7,880)
	14" W.C.	5,350 (7,909)	5,350 (7,909)	5,350 (7,909)
PFG300-HC 1-1/2" DC 31154-DC 1-1/2"	8" W.C.	6,581 (8,197)	6,581 (8,197)	6,581 (8,197)
	11" W.C.	6,606 (8,228)	6,606 (8,228)	6,606 (8,228)
	14" W.C.	6,630 (8,258)	6,630 (8,258)	6,630 (8,258)
PFG300-HC 2" DC 31155-DC 2"	8" W.C.	13,277 (15,009)	13,277 (15,009)	13,277 (15,009)
	11" W.C.	13,327 (15,065)	13,327 (15,065)	13,327 (15,065)
	14" W.C.	13,376 (15,121)	13,376 (15,121)	13,376 (15,121)
PFG300-HC 2-1/2" DC 31156/F-DC 2-1/2"	8" W.C.	16,741 (19,050)	16,741 (19,050)	16,741 (19,050)
	11" W.C.	16,803 (19,121)	16,803 (19,121)	16,803 (19,121)
	14" W.C.	16,866 (19,192)	16,866 (19,192)	16,866 (19,192)
PFG300-HC 3" DC 31157/F-DC 3"	8" W.C.	18,473 (23,091)	18,473 (23,091)	18,473 (23,091)
	11" W.C.	18,542 (23,177)	18,542 (23,177)	18,542 (23,177)
	14" W.C.	18,610 (23,263)	18,610 (23,263)	18,610 (23,263)
PFG300-HC 4" DC 31158/F-DC 4"	8" W.C.	32,905 (40,410)	32,905 (40,410)	32,905 (40,410)
	11" W.C.	33,028 (40,560)	33,028 (40,560)	33,028 (40,560)
	14" W.C.	33,150 (40,710)	33,150 (40,710)	33,150 (40,710)

-SC stands for the Standard Capacity version and -HC for the High Capacity version

Tab.7

TECHNICAL DATA

High-efficiency application

Capacity in cfh for .60 Specific gravity gas with filter (capacity without filter in brackets)

Description and Model Number	Outlet Pressure Set Point	Operating Inlet Pressure 3 PSIG	5 PSIG	10 PSIG
PFG300-SC 1/2" DC 31051-DC 1/2"	8" W.C.	667 (785)	667 (785)	667 (785)
	11" W.C.	670 (788)	670 (788)	670 (788)
	14" W.C.	672 (791)	672 (791)	672 (791)
PFG300-SC 3/4" DC 31052-DC 3/4"	8" W.C.	805 (981)	805 (981)	805 (981)
	11" W.C.	808 (985)	808 (985)	808 (985)
	14" W.C.	811 (989)	811 (989)	811 (989)
PFG300-SC 1" DC 31053-DC 1"	8" W.C.	1,080 (1,276)	1,080 (1,276)	1,080 (1,276)
	11" W.C.	1,084 (1,281)	1,084 (1,281)	1,084 (1,281)
	14" W.C.	1,088 (1,285)	1,088 (1,285)	1,088 (1,285)
PFG300-HC 1/2" DC 31150-DC 1/2"	8" W.C.	1,091 (1,536)	1,091 (1,536)	1,091 (1,536)
	11" W.C.	1,095 (1,541)	1,095 (1,541)	1,095 (1,541)
	14" W.C.	1,099 (1,547)	1,099 (1,547)	1,099 (1,547)
PFG300-HC 3/4" DC 31151-DC 3/4"	8" W.C.	1,277 (1,940)	1,277 (1,940)	1,277 (1,940)
	11" W.C.	1,282 (1,947)	1,282 (1,947)	1,282 (1,947)
	14" W.C.	1,286 (1,954)	1,286 (1,954)	1,286 (1,954)
PFG300-HC 1" DC 31152-DC 1"	8" W.C.	1,616 (2,303)	1,616 (2,303)	1,616 (2,303)
	11" W.C.	1,622 (2,312)	1,622 (2,312)	1,622 (2,312)
	14" W.C.	1,628 (2,320)	1,628 (2,320)	1,628 (2,320)
PFG300-HC 1-1/4" DC 31153-DC 1-1/4"	8" W.C.	3,718 (5,496)	3,718 (5,496)	3,718 (5,496)
	11" W.C.	3,732 (5,516)	3,732 (5,516)	3,732 (5,516)
	14" W.C.	3,745 (5,537)	3,745 (5,537)	3,745 (5,537)
PFG300-HC 1-1/2" DC 31154-DC 1-1/2"	8" W.C.	4,607 (5,738)	4,607 (5,738)	4,607 (5,738)
	11" W.C.	4,624 (5,760)	4,624 (5,760)	4,624 (5,760)
	14" W.C.	4,641 (5,781)	4,641 (5,781)	4,641 (5,781)
PFG300-HC 2" DC 31155-DC 2"	8" W.C.	9,294 (10,506)	9,294 (10,506)	9,294 (10,506)
	11" W.C.	9,329 (10,546)	9,329 (10,546)	9,329 (10,546)
	14" W.C.	9,363 (10,585)	9,363 (10,585)	9,363 (10,585)
PFG300-HC 2-1/2" DC 31156/F-DC 2-1/2"	8" W.C.	11,719 (13,335)	11,719 (13,335)	11,719 (13,335)
	11" W.C.	11,762 (13,385)	11,762 (13,385)	11,762 (13,385)
	14" W.C.	11,806 (13,434)	11,806 (13,434)	11,806 (13,434)
PFG300-HC 3" DC 31157/F-DC 3"	8" W.C.	12,931 (16,164)	12,931 (16,164)	12,931 (16,164)
	11" W.C.	12,979 (16,224)	12,979 (16,224)	12,979 (16,224)
	14" W.C.	13,027 (16,284)	13,027 (16,284)	13,027 (16,284)
PFG300-HC 4" DC 31158/F-DC 4"	8" W.C.	23,033 (28,287)	23,033 (28,287)	23,033 (28,287)
	11" W.C.	23,119 (28,392)	23,119 (28,392)	23,119 (28,392)
	14" W.C.	23,205 (28,497)	23,205 (28,497)	23,205 (28,497)

-SC stands for the Standard Capacity version and -HC for the High Capacity version

Tab.8

PFG300HP GOVERNOR STANDARD MODEL

2 PSIG

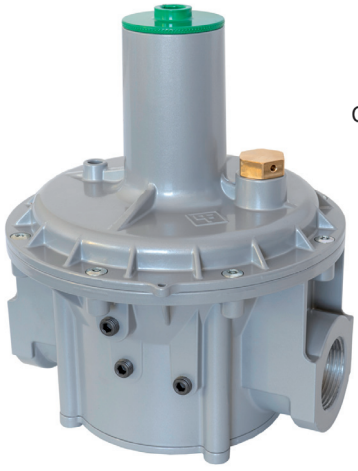

STANDARD MODEL

Inlet Pressure Range: 3” W.C. to 2 PSIG

MAIN FEATURES

ANSI Z21.80A / CSA 6.22A Class I for outlet pressures up to 14” W.C. Certified
Integral Vent Limiter
External Vent Limiter – no vent line required**
Positive 100% bubble tight lockup
Inlet and Outlet test ports 500 to 1 Turndown
Filter included in all models

SPECIFICATIONS

Suitable for use with Natural Gas,
LPG, and other non-corrosive, clean gas
Inlet Pressure: 3” W.C. to 2 PSIG CSA approved
Max. Inlet 15 PSIG for non-CSA applications
Outlet pressure: 2” W.C. to 14” W.C. CSA approved
up to 4.25 PSIG for non-CSA applications
Temperature range: -40°F to 150°F
Connections: ½” thru 4”
Maximum Emergency Inlet Exposure Pressure: 80 PSIG
Suitable for Indoor or Outdoor Installation****

VENT SIZE

1/4” NPT 1/2” – 1”
1/2” NPT 1-1/4” – 4”

OUTLET SPRING RANGE

Green	2” W.C. to 5.1” W.C.*
Red	2.75” W .C. to 7.87” W.C.*
White	4” W .C. to 11.8” W.C.*
Black	6” W.C. to 14” W.C.*
Yellow	9.8” W.C. to 27.5” W.C.*
Violet	23.6” W.C. to 59” W.C. or 0.85 to 2.13 PSIG *
Orange	55” W.C. to 118” W.C. or 2 to 4.26 PSIG

* Spring is CSA outlet pressure certified
** As Approved by Local Codes and Standards
*** Brass vent limiter must be removed for outdoor installation

TECHNICAL DATA

Capacity in cfh for .60 Specific gravity gas with filter (capacity without filter in brackets)

Description and Model Number	Outlet Pressure	Operating Inlet Pressure		
	Set Point	14" W.C.	1 PSIG	2 PSIG
PFG300HP-SC 1/2" STD	8" W.C.	254 (254)	456 (456)	647 (647)
31061 1/2"	11" W.C.	181 (181)	422 (422)	649 (649)
PFG300HP-SC 3/4" STD	8" W.C.	317 (317)	570 (570)	808 (808)
31062 3/4"	11" W.C.	227 (227)	527 (527)	811 (811)
PFG300HP-SC 1" STD	8" W.C.	408 (408)	732 (732)	1,039 (1,039)
31063 1"	11" W.C.	291 (291)	677 (677)	1,043 (1,043)
PFG300HP-HC 1/2" STD	8" W.C.	612 (612)	1,098 (1,098)	1,559 (1,559)
31160 1/2"	11" W.C.	437 (437)	1,016 (1,016)	1,564 (1,564)
PFG300HP-HC 3/4" STD	8" W.C.	771 (771)	1,383 (1,383)	1,963 (1,963)
31161 3/4"	11" W.C.	550 (550)	1,280 (1,280)	1,970 (1,970)
PFG300HP-HC 1" STD	8" W.C.	906 (906)	1,627 (1,627)	2,309 (2,309)
31162 1"	11" W.C.	647 (647)	1,505 (1,505)	2,318 (2,318)
PFG300HP-HC 1-1/4" STD	8" W.C.	2,470 (2,470)	4,434 (4,434)	6,292 (6,292)
31163 1-1/4"	11" W.C.	1,764 (1,764)	4,102 (4,102)	6,316 (6,316)
PFG300HP-HC 1-1/2" STD	8" W.C.	2,583 (2,583)	4,638 (4,638)	6,581 (6,581)
31164 1-1/2"	11" W.C.	1,845 (1,845)	4,291 (4,291)	6,606 (6,606)
PFG300HP-HC 2" STD	8" W.C.	5,439 (5,439)	9,764 (9,764)	13,855 (13,855)
31165 2"	11" W.C.	3,885 (3,885)	9,033 (9,033)	13,906 (13,906)
PFG300HP-HC 2-1/2" STD	8" W.C.	6,708 (6,708)	12,042 (12,042)	17,087 (17,087)
31166/F 2-1/2"	11" W.C.	4,791 (4,791)	11,140 (11,140)	17,151 (17,151)
PFG300HP-HC 3" STD	8" W.C.	8,158 (8,158)	14,646 (14,646)	20,782 (20,782)
31167/F 3"	11" W.C.	5,827 (5,827)	13,549 (13,549)	20,859 (20,859)
PFG300HP-HC 4" STD	8" W.C.	14,277 (14,277)	25,630 (25,630)	36,369 (36,369)
31168/F 4"	11" W.C.	10,198 (10,198)	23,711 (23,711)	36,504 (36,504)

-SC stands for the Standard Capacity version and -HC for the High Capacity version

Tab.9

TECHNICAL DATA

High-efficiency application

Capacity in cfh for .60 Specific gravity gas with filter (capacity without filter in brackets)

Description and Model Number	Outlet Pressure	Operating Inlet Pressure		
	Set Point	14" W.C.	1 PSIG	2 PSIG
PFG300HP-SC 1/2" STD	8" W.C.	216 (216)	387 (387)	550 (550)
31061 1/2"	11" W.C.	154 (154)	358 (358)	552 (552)
PFG300HP-SC 3/4" STD	8" W.C.	270 (270)	484 (484)	687 (687)
31062 3/4"	11" W.C.	193 (193)	448 (448)	690 (690)
PFG300HP-SC 1" STD	8" W.C.	347 (347)	622 (622)	883 (883)
31063 1"	11" W.C.	248 (248)	576 (576)	887 (887)
PFG300HP-HC 1/2" STD	8" W.C.	428 (428)	769 (769)	1,091 (1,091)
31160 1/2"	11" W.C.	306 (306)	711 (711)	1,095 (1,095)
PFG300HP-HC 3/4" STD	8" W.C.	539 (539)	968 (968)	1,374 (1,374)
31161 3/4"	11" W.C.	385 (385)	896 (896)	1,379 (1,379)
PFG300HP-HC 1" STD	8" W.C.	635 (635)	1,139 (1,139)	1,616 (1,616)
31162 1"	11" W.C.	453 (453)	1,054 (1,054)	1,622 (1,622)
PFG300HP-HC 1-1/4" STD	8" W.C.	1,729 (1,729)	3,104 (3,104)	4,405 (4,405)
31163 1-1/4"	11" W.C.	1,235 (1,235)	2,872 (2,872)	4,421 (4,421)
PFG300HP-HC 1-1/2" STD	8" W.C.	1,808 (1,808)	3,246 (3,246)	4,607 (4,607)
31164 1-1/2"	11" W.C.	1,292 (1,292)	3,003 (3,003)	4,624 (4,624)
PFG300HP-HC 2" STD	8" W.C.	3,807 (3,807)	6,835 (6,835)	9,698 (9,698)
31165 2"	11" W.C.	2,719 (2,719)	6,323 (6,323)	9,734 (9,734)
PFG300HP-HC 2-1/2" STD	8" W.C.	4,696 (4,696)	8,429 (8,429)	11,961 (11,961)
31166/F 2-1/2"	11" W.C.	3,354 (3,354)	7,798 (7,798)	12,006 (12,006)
PFG300HP-HC 3" STD	8" W.C.	5,711 (5,711)	10,252 (10,252)	14,547 (14,547)
31167/F 3"	11" W.C.	4,079 (4,079)	9,484 (9,484)	14,602 (14,602)
PFG300HP-HC 4" STD	8" W.C.	9,994 (9,994)	17,941 (17,941)	25,458 (25,458)
31168/F 4"	11" W.C.	7,139 (7,139)	16,598 (16,598)	25,553 (25,553)

-SC stands for the Standard Capacity version and -HC for the High Capacity version

Tab.10

PFG300-RA RATIO GOVERNOR

MAIN FEATURES

ANSI Z21.18 / CSA 6.3 for
inlet pressure up to 5 PSIG certified
Positive 100% bubble tight lockup
Inlet and Outlet test ports
Filter included in all models

SPECIFICATIONS

Suitable for use with Natural Gas,
LPG, and other non-corrosive, clean gas
Inlet Pressure: 8” W.C. to 5 PSIG CSA approved
Outlet pressure: 0.8” W.C. to 2 PSIG CSA approved
Temperature range: -40°F to 150°F
Connections: ½” thru 4”
Suitable for Indoor or Outdoor Installation

VENT SIZE

1/4” NPT 1/2” – 1”
1/2” NPT 1-1/4” – 4”

TECHNICAL DATA

Capacity in cfh for .60 Specific gravity gas with filter (capacity without filter in brackets)

Description and Model Number	Outlet Pressure	Operating Inlet Pressure		
	Set Point	14" W.C.	1 PSIG	2 PSIG
PFG300-RA 1/2" STD	8" W.C.	526 (725)	944 (1,302)	1,339 (1,847)
31150-RA 1/2"	11" W.C.	376 (518)	873 (1,204)	1,344 (1,854)
PFG300-RA 3/4" STD	8" W.C.	612 (929)	1,098 (1,668)	1,559 (2,367)
31151-RA 3/4"	11" W.C.	437 (664)	1,016 (1,543)	1,564 (2,376)
PFG300-RA 1" STD	8" W.C.	771 (1,088)	1,383 (1,953)	1,963 (2,771)
31152-RA 1"	11" W.C.	550 (777)	1,280 (1,807)	1,970 (2,781)
PFG300-RA 1-1/4" STD	8" W.C.	1,768 (2,629)	3,173 (4,719)	4,503 (6,696)
31153-RA 1-1/4"	11" W.C.	1,263 (1,878)	2,936 (4,366)	4,520 (6,721)
PFG300-RA 1-1/2" STD	8" W.C.	2,198 (2,765)	3,946 (4,963)	5,600 (7,043)
31154-RA 1-1/2"	11" W.C.	1,570 (1,975)	3,651 (4,592)	5,620 (7,069)
PFG300-RA 2" STD	8" W.C.	4,442 (4,986)	7,974 (8,950)	11,315 (12,700)
31155-RA 2"	11" W.C.	3,173 (3,561)	7,377 (8,280)	11,357 (12,747)
PFG300-RA 2-1/2" STD	8" W.C.	5,665 (6,345)	10,171 (11,391)	14,432 (16,164)
31156/F-RA 2-1/2"	11" W.C.	4,047 (4,532)	9,409 (10,538)	14,486 (16,224)
PFG300-RA 3" STD	8" W.C.	6,255 (7,705)	11,228 (13,832)	15,933 (19,627)
31157/F-RA 3"	11" W.C.	4,468 (5,504)	10,388 (12,796)	15,992 (19,701)
PFG300-RA 4" STD	8" W.C.	11,014 (13,507)	19,772 (24,247)	28,056 (34,406)
31158/F-RA 4"	11" W.C.	7,867 (9,648)	18,291 (22,431)	28,160 (34,534)

Tab.11

PFG300-ZE ZERO GOVERNOR

MAIN FEATURES

ANSI Z21.18 / CSA 6.3 for
inlet pressure up to 5 PSIG certified
Positive 100% bubble tight lockup
External Vent Limiter – no vent line required**
Inlet and Outlet test ports
Filter included in all models

SPECIFICATIONS

Suitable for use with Natural Gas,
LPG, and other non-corrosive, clean gas
Inlet Pressure: 8” W.C. to 5 PSIG CSA approved
Outlet pressure: -2” W.C. to 2 W.C. CSA approved
Temperature range: -40°F to 150°F
Connections: ½” thru 4”
Suitable for Indoor or Outdoor Installation***

VENT SIZE

1/4” NPT 1/2” – 1”
1/2” NPT 11/4” – 4”

** As Approved by Local Codes and Standards
*** Brass vent limiter must be removed for outdoor installation

TECHNICAL DATA

Capacity in cfh for .60 Specific gravity gas with filter (capacity without filter in brackets)

Description and Model Number	Outlet Pressure	Operating Inlet Pressure		
	Set Point	14" W.C.	1 PSIG	2 PSIG
PFG300-ZE 1/2" STD 31150-ZE 1/2"	2" W.C.	734 (1,013)	1,068 (1,473)	1,329 (1,833)
PFG300-ZE 3/4" STD 31151-ZE 3/4"	2" W.C.	854 (1,298)	1,243 (1,887)	1,547 (2,349)
PFG300-ZE 1" STD 31152-ZE 1"	2" W.C.	1,076 (1,519)	1,565 (2,209)	1,948 (2,750)
PFG300-ZE 1-1/4" STD 31153-ZE 1-1/4"	2" W.C.	2,468 (3,671)	3,590 (5,338)	4,469 (6,646)
PFG300-ZE 1-1/2" STD 31154-ZE 1-1/2"	2" W.C.	3,070 (3,861)	4,464 (5,615)	5,558 (6,990)
PFG300-ZE 2" STD 31155-ZE 2"	2" W.C.	6,203 (6,962)	9,020 (10,125)	11,230 (12,605)
PFG300-ZE 2-1/2" STD 31156/F-ZE 2-1/2"	2" W.C.	7,912 (8,861)	11,505 (12,886)	14,324 (16,043)
PFG300-ZE 3" STD 31157/F-ZE 3"	2" W.C.	8,735 (10,760)	12,702 (15,647)	15,814 (19,481)
PFG300-ZE 4" STD 31158/F-ZE 4"	2" W.C.	15,380 (18,862)	22,366 (27,428)	27,846 (34,148)

Tab.12

STANDARD MODEL DIMENSIONS

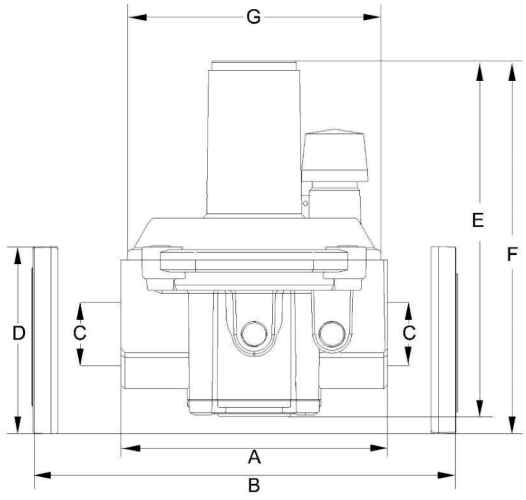

Description and Model Number		Size	A	B	C	D	E	F	G*	Weight (Lbs)
PFG400 STD	PF400S	3/8 NPT	3.90	-	3/8	-	3.42	-	3.10	0.56
PFG400 STD	PF400S	1/2” NPT	3.90	-	1/2	-	3.42	-	3.10	0.56
PFG300-SC STD	31051	1/2” NPT	4.09	-	1/2	-	5.59	-	3.78	1.54
PFG300-SC STD	31052	3/4” NPT	4.09	-	3/4	-	5.59	-	3.78	1.54
PFG300-SC STD	31053	1” NPT	4.09	-	1	-	5.59	-	3.78	1.54
PFG300-HC STD	31150	1/2” NPT	4.72	-	1/2	-	6.89	-	4.49	2.75
PFG300-HC STD	31151	3/4” NPT	4.72	-	3/4	-	6.89	-	4.49	2.75
PFG300-HC STD	31152	1” NPT	4.72	-	1	-	6.89	-	4.49	2.75
PFG300-HC STD	31153	1-1/4” NPT	7.68	-	1-1/4	-	10	-	7.56	7.5
PFG300-HC STD	31154	1 1/2” NPT	7.68	-	1 1/2	-	10	-	7.56	7.5
PFG300-HC STD	31155	2” NPT	9.29	-	2	-	12.44	13.74	7.56	12.34
PFG300-HC STD	31156/F	2-1/2” FLANGED	-	16.9	3	ANSI 150	-	17.09	12.52	27.56
PFG300-HC STD	31157/F	3” FLANGED	-	16.9	3	ANSI 150	-	17.09	12.52	27.56
PFG300-HC STD	31158/F	4” FLANGED	-	16.9	4	ANSI 150	-	19.76	12.52	27.56
* (**G**) Dimensions is the width of the regulator										Tab.13

The weights and dimensions listed above refer to the standard model. These specifications also apply to the PFG300HP (High Pressure), PFG300-ZE (Zero), and PFG300-RA (Ratio) versions of the regulator

DUAL CUT or OVER PRESSURE DEVICE (DC or OPD) MODEL DIMENSIONS

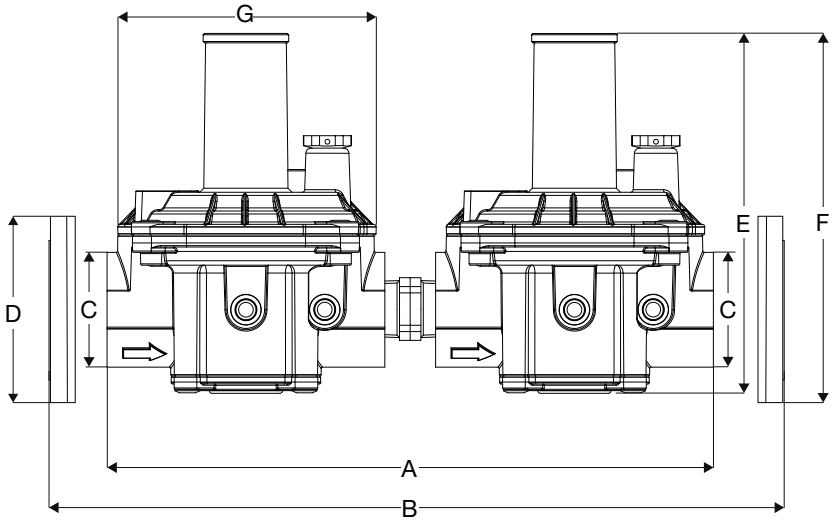

Description and Model Number		Size	A	B	C	D	E	F	G*	Weight (Lbs)
PFG400 DC	PF400S	3/8 NPT	8.40	-	3/8	-	3.42	-	3.10	1.18
PFG400 DC	PF400S	1/2” NPT	8.50	-	1/2	-	3.42	-	3.10	1.20
PFG300-SC DC	31051	1/2” NPT	8.46	-	1/2	-	5.59	-	3.78	3.25
PFG300-SC DC	31052	3/4” NPT	8.46	-	3/4	-	5.59	-	3.78	3.25
PFG300-SC DC	31053	1” NPT	8.46	-	1	-	5.59	-	3.78	3.25
PFG300-HC DC	31150	1/2” NPT	10.10	-	1/2	-	6.89	-	4.49	5.75
PFG300-HC DC	31151	3/4” NPT	10.10	-	3/4	-	6.89	-	4.49	5.75
PFG300-HC DC	31152	1” NPT	10.10	-	1	-	6.89	-	4.49	5.75
PFG300-HC DC	31153	1-1/4” NPT	16.69	-	1-1/4	-	10	-	7.56	15.5
PFG300-HC DC	31154	1 1/2” NPT	16.69	-	1 1/2	-	10	-	7.56	15.5
PFG300-HC DC	31155	2” NPT	19.88	-	2	-	12.44	13.74	7.56	25
PFG300-HC DC	31156/F	2-1/2” FLANGED	-	33.93	3	ANSI 150	-	17.09	12.52	56
PFG300-HC DC	31157/F	3” FLANGED	-	33.93	3	ANSI 150	-	17.09	12.52	56
PFG300-HC DC	31158/F	4” FLANGED	-	33.93	4	ANSI 150	-	19.76	12.52	56

* (**G**) Dimensions is the width of the regulator

Tab.14

The weights and dimensions listed above refer to the DC (Dual Cut) model. These specifications also apply to the OPD (Over Pressure Device) model of the regulator.

www.fiorentini.com

www.gasinside.com

The data are not binding. We reserve the right to make changes without prior notice.